C.E. Electronics, Inc.
2107 Industrial Drive
Bryan, OH 43506
PH (419) 636-6705 FX (419) 636-2516
www.ceelectronics.com

EA104-PXX

Ver. 2 Rel. 09/05/2024

ELITE PI® PRO

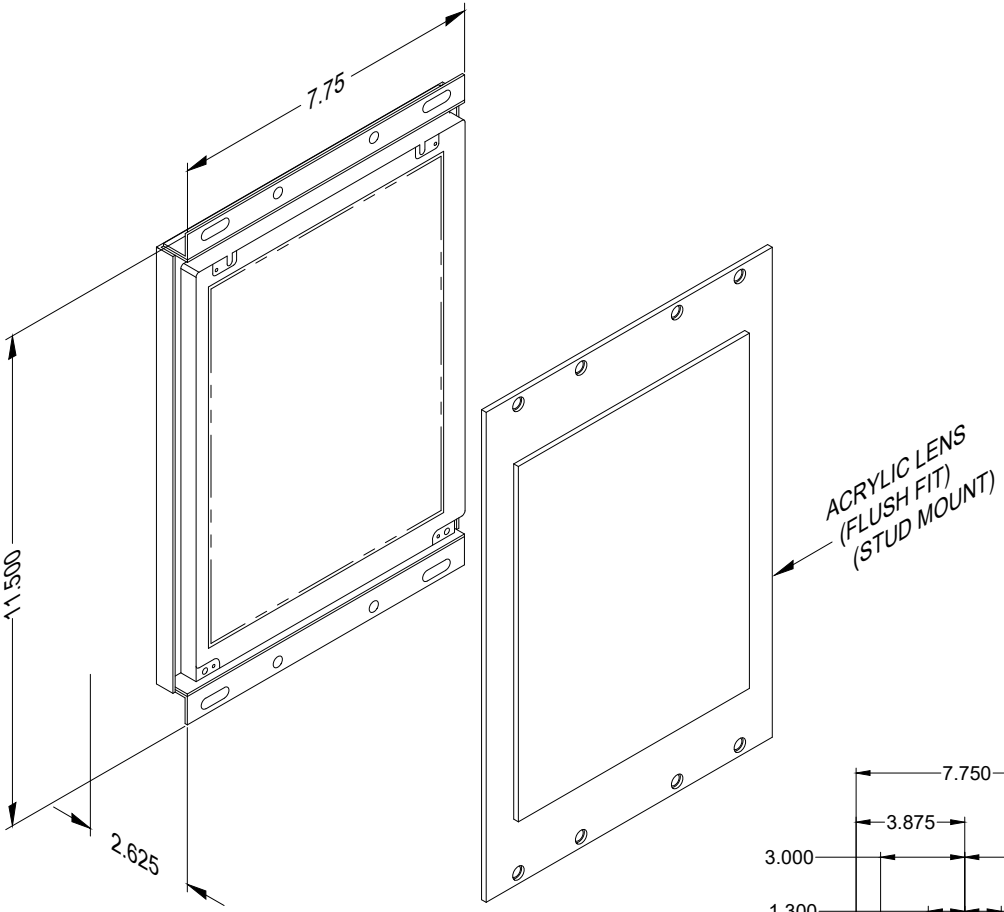

Unit is 2-5/8 Inch Deep

3-1/2 Inch Box Depth Recomended

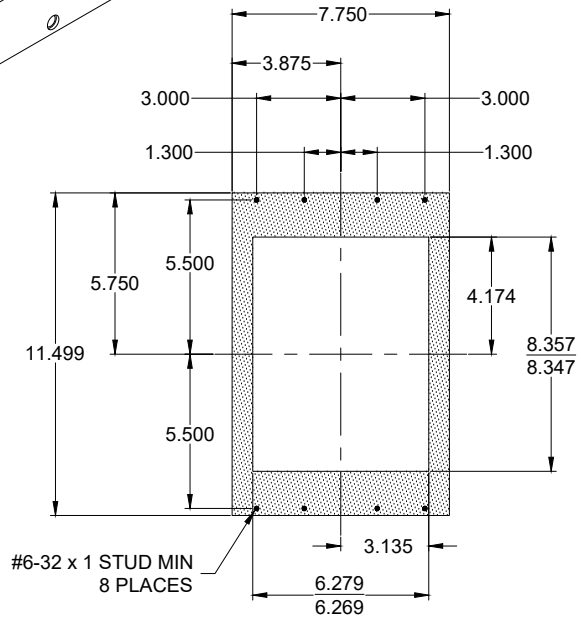

AS VIEWED FROM FRONT

10.4 INCH Elite PI® PRO Portrait

The MICRO COMM® Elite PI® PRO is the most flexible position indicator available. With the Elite PI® Designer software, you can PROgram your own position indicator by customizing background colors and logos, messages, and arrow styles. This system offers full network support with our ENET, giving you the ability to PROgram the screen from any computer in the building.

In addition to design flexibility, the MICRO COMM® Elite PI® PRO can display floor, priority, and time-based messages.

Typical Applications

- Car operating panel
- Car transom
- Lobby

Features:

- Fully customizable and and PROgrammable
- Elite PI® software
- Streaming video capabilities with an HDINT video encoder
- Passing chime output
- Self testing
- Low profile
- Multi-car capabilities for hallway use
- MICRO COMM serial link input
- One remote cpu box can support 2 screens
- CPU box can be up to 25 feet from screen

TO ORDER: - EA104 - PXX

"H" = HORIZONTAL (Landscape)
"V" = VERTICAL (Portrait)

SERIES:

"A" = AUXILIARY PANEL LINK

RELATED DRAWINGS	
DESCRIPTION	DRAWING NAME
PANEL PREP.	PP104-9
DETAIL DIM.	DD104-9
TIME ZONES	T-ZONES